ISSUE NUMBER 2.

HUNTER VALLEY VZ USERS' GROUP NEWSLETTER.

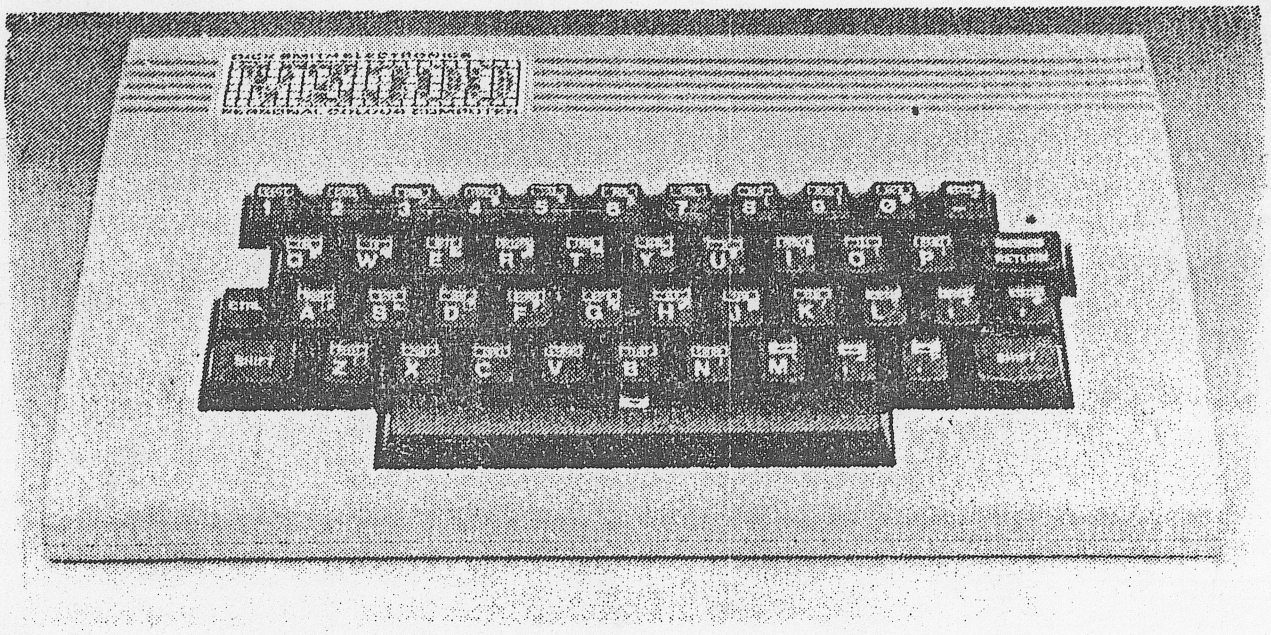

JULY 1986.

EDITORIAL - - -

Well not much need for an Editorial in this Issue. I feel all that had to be said, has been. Thanks to those who have submitted to this Newsletter.

Of course, tonights party night. Our official opening. Fruit juice (fortified or non), party pies and other snacks will be the go.

Good to see D.S.E. supporting us with an appearance. (As this is printed prior to the meeting, you'll just have think that I have ESP.) Thanks to Manageress Doris Behrens and Salesman Darren McGuiness for coming along.

Looking foward to the big Technichal Report in the next issue, make sure you don't miss it.

Even VZ make mistakes...pretty sad isn't it?
In the article on the speech synthesiser a bug has crept in. At the bottom of the page where it reads ... "For this reason KK3, has been substituted for KR." ... It should now read ... "For this reason KR, has been substituted for KK3" ... Sorry David!

Thanks to Jamie Perry of the D.S.E Computer Support Group, in Sydney, for sending up all that helpful information.

Gavin.

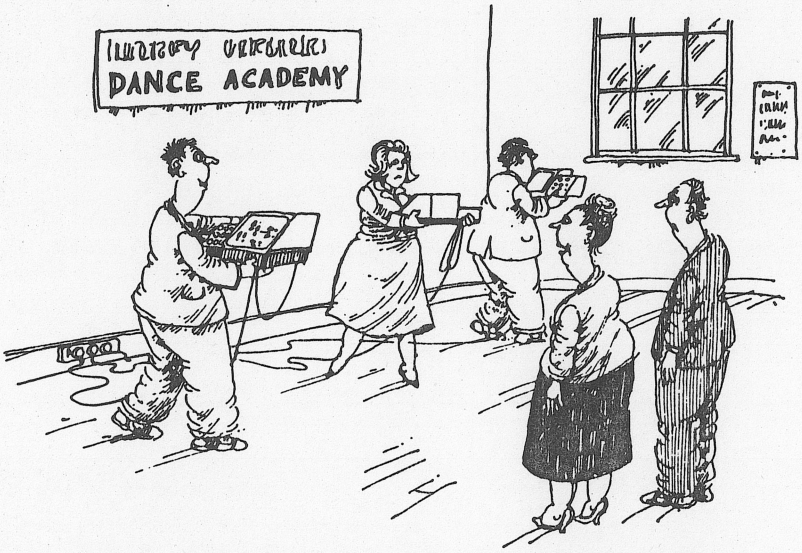

'Computers have solved my problem of lack of instructors.'

PRESIDENTS REPORT.

Hello there,

Welcome to edition number two of our Newsletter. I hope you enjoyed the first issue and find we have progressed a bit with this one. Please keep in mind that we are a new group and are taking it one step at a time. Any help will be gratefully accepted.

We have lost our Vice Pres. due to his other commitments and would like to wish Phil all the best for his future endeavours. Our last meeting was a great success as we had the pleasure of seeing some new faces and signing up some more Members. We are happy to see that D.S.E. are coming to the party in more ways than one. Head office has sent us some programs that are public domain and the local branch at Tighes Hill are bending over backwards to help us in any way they can. Just hope they don't slip a disk in the process.

With the colder weather coming on, the old hall gets a bit cool of a night so we might have to huddle together for warmth, (hope to see some more female Members). There were a couple of interesting displays at the June Meeting. Gavin showed us how cheeky his VZ is by making it talk and Rudy gave us a demo on glass R.T.T.Y. (radio teletype for those not in the know). Now don't forget our SWAP AND SHOP section, if you have anything to swap or sell then let any of our Committee Members know about it in time for the Newsletter. It costs Members zilch for twenty-five lines or less and you can't get cheaper than that!

In this Issue you will find a couple of Basic programs aimed mainly at those beginners who would like HANDS ON experience. These programs have no instructions and one is for use with Joysticks.

In the next Newsletter we hope to have a computer generated crossword puzzle to tantalize your minds. If it works out well it will become a regular feature. Also in the planning stages are BASIC learning classes. If you are interested, check out the form near the back of this Issue. As you know this newsletter is put together by a few people and we rely on INPUT from Members and other interested parties. Many thanks to those already contributing. This is written using the VZ word processor and printed on an Epsom Compatible printer.

Okay, now turn the page and read on...

Pete.

*** STOP PRESS ***

Next month look out for an article on PRINTer buffers. Kit form, from Don MacKenzie in Melbourne. From 8K to an astounding 256K. Many features. Budget priced.

The following two programs have been included, simply because of demand. After the first issue, members were asked what they thought was missing. A few ideas were bandied about, along the lines of program LLISTings for beginners, a centrefold pin-up girl and perhaps some cartoons/humor. Well, as the song says, two out of three ain't bad. (How many readers just turned to the middle pages?).

Both programs have no instructions. The first is a good base for a game. Type it in, and see where you can alter or change it to make a player vs. player, or player vs. computer fun game. Most of the hard work has been done for you! Sit down with your BASIC reference manual and let us know what you come up with!

```
0 POKE30744,1
3 CLS
5 CP=28672
15 COLOR2:PRINT@206,"▮▮"
20 FORI%=256TO287:POKECP+I%,191:NEXT
30 FORI%=288TO383STEP2:POKECP+I%,207:NEXT
50 K$=INKEY$:A$=INKEY$
55 IFA$=""THEN50
60 IFA$="M"ANDX>0THENX=X-1
70 IFA$=","ANDX<31THENX=X+1
75 YP=28896+X
80 K=PEEK(YP)
81 IFYP>28924ANDYP<28928THEN3000
82 IFK=149ORK=154ORK=159THEN3000
83 IFPEEK(YP+32)=207THEN3000
84 IFPEEK(YP+32)=32THEN3000
90 POKEOP,32:POKEYP,43
91 PRINT@20,"SCORE";SC
100 OP=YP
105 SC=SC+1
110 P=RND(20)
115 IFP=16THENP=13
116 IFP=8THENP=9
117 IFP=10THENP=1
120 IFP=1THENCOLOR4:PRINT@258,"■ ■ ■ ■ "
130 IFP=20THENCOLOR4:FORP=0TO7:POKECP+258+P,191:NEXT
140 IFP=13THENCOLOR2:PRINT@206,"    ":PRINT@238,"▮▮▮"
150 IFP=9THENCOLOR2:PRINT@206,"▮▮▮":PRINT@238,"    "
160 IFP=5THENGOSUB1000
170 IFP=17THENGOSUB2000
180 GOTO50
1000 FORK=0TO3:POKECP+282+K,207:NEXT:RETURN
2000 FORK=0TO3:POKECP+192+K,207:NEXT:RETURN
3000 END
```

Here's the second program. This one runs in high res. and takes its INPUTs through the joysticks. If you wish, this can be easily changed to keyboard. Line number 30 is the operative one. Perhaps you could also add some music or some graphics to indicate the color that won. Adam Magee is to blame for these tasks that have been set for you. Many thanks Adam, for taking time out from your mid-year exams to do this for us.

```
0 V=1:X=-1
5 D=31:E=126:F=31:C=1
10 REM BLOCK OUT
20 MODE(1)
21 FORI%=28672TO28703:POKEI%,RND(255):POKEI%+2016,RND(255):NEXT
22 FORI%=0TO63:SET(0,I%):SET(127,I%):COLORRND(3)+1:NEXT
30 A=(INP(43)AND31):B=(INP(46)AND31)
40 IFB=30ANDD>1THENU=-1:V=0
50 IFB=29ANDD<62THENU=1:V=0
60 IFB=27ANDC>1THENV=-1:U=0
70 IFB=23ANDC<126THENV=1:U=0
80 IFA=30ANDF>1THENY=-1:X=0
90 IFA=29ANDF<62THENY=1:X=0
91 IFA=27ANDE>1THENX=-1:Y=0ELSEIFA=23ANDE<126THENX=1:Y=0
92 IF D=0 THEN D=1
93 IF D=63THEN D=62
94 IF C=0 THEN C=1
95 IF C=127 THEN C=126
96 IF E=127 THEN E=126
97 IF E=0 THEN E=1
98 IF F=0 THEN F=1
99 IF F=63 THEN F=62
111 C=C+V:D=D+U:E=E+X:F=F+Y
113 IFPOINT(C,D)=2THENCLS:PRINT"YELLOW WON":END
114 IFPOINT(E,F)=3THENCLS:PRINT"BLUE WON":END
115 IFPOINT(C,D)=3THENCLS:PRINT"YELLOW WON":END
116 IFPOINT(E,F)=2THENCLS:PRINT"BLUE WON":END
120 COLOR3:SET(C,D)
130 COLOR2:SET(E,F)
140 GOTO30
```

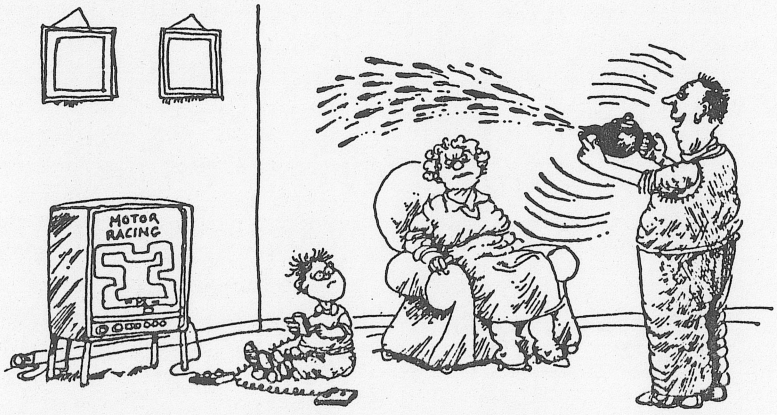

'Of course, the winner should really be spraying champagne about.'

GAMES REVIEW DEPT.

RELEASE THE CHOCKS SMITHY

Those of you who have had your VZ's for a long time would know that there was a terrific program available called LEARJET. Unfortunately, for some unknown reason, LEARJET is no longer sold by D.S.E. or for that matter, anyone else.

In LEARJET your wits as a pilot and an adventurer are put to the test when you are challenged to take off and land your LEARJET aircraft. A basic aviation knowledge is assumed, but there is a quick but detailed run down of some of the terms in the comprehensive manual supplied with the tape.

This is a true simulation (by the computer meaning) because the computer at no time gives you a graphics picture of what's going on around you. You rely solely on the instrument panel in front of you which takes up the entire screen. This panel is a mixture of low res. and text and as some instruments couldn't be fitted, a few share the same position. For example, Indicated Air Speed, by pressing certain keys can be changed to show True Air Speed or Mach Speed. The key scan routine is rather cumbersome in that it may take up to five seconds for the computer to register the input. This is for two reasons- 1. the keyboard scan routine is slow; 2. nearly the whole keyboard is used to control the aircraft.

After a high res title page you are presented with a list of ten origin and destination points. The longest journey being from Melbourne to Brisbane at 767 nautical miles and the shortest flight is from Williamtown to Sydney, being 76 nautical miles.

The game is highly involved. A routine flight from Sydney to Melbourne take about an hour to successfully complete. A great program for the retired pilot who wants to fly again without leaving the ground.

The manual is full of facts and figures required to operate the instruments. Runway lengths, fuel calculations etc... are all essential for safe flying.

The program was written by J. Keech and P. Russel and is well worth trying to get hold of.

LOADING TIME: Disk- 27 sec.
Tape-4.52 min.

GRAPHICS.....NA
SOUND.....**
ANIMATION....NA
OVER ALL.....****

TECHNICAL REPORT.

Do you want a SUPER DUPER VZ 200? If the answer is yes then buy, beg or borrow the July issue of E.T.I. (Electronics Today International) and all will be revealed. It has a project on how to make your VZ 200 SUPER DUPER. VZ 300 owners should not despair as with a little ingenuity and the P.C.B. used in the project they can also have a SUPER VZ, not DUPER though. The project will show you how to -

1) Increase VZ 200 memory to 36K (Including Video Ram).
2) Connect an external full size keyboard.
3) Increase the C.P.Unit's running speed.
4) Stop screen wavering.
5) Stop regulator overheating problems.
6) Install RESET and PAUSE SWITCHES.

The PAUSE switch will be welcomed with open arms by games addicts as it allows them to pause the game while blasting aliens, etc. With the exception of Keyboard, most mods. will fit inside the VZ 200 case. The P.C.B. will hold a maximum of 34K of CMOS RAM. It comprises of 4 x 8K and 1 x 2K RAMS. The 6K internal RAM board has to be removed and replaced by the 34K RAM board. The P.C.B. opens up some exciting possibilities not mentioned in the article. Some of the more exciting are -

1) Full battery backup of VZ 200.
2) Increase the MEMORY by a further 10K.
3) Disk Drive users can have 5 x 2K RAMS or EPROMS (switchable) in the 2K gap between the DOS ROM and start of program RAMS.
4) A mixture of CMOS RAMS and EPROMS is also possible. Your favourite game, program or utility can be placed in EPROM or Battery Backed RAM and available at POWER UP without having to wait for it to load.

These are only some of the possibilities. Look for a Battery Backed RAM project in a forthcomming issue. Also comming is a project on how to modify you Joystick Interface so other Joysticks can be used besides the captive TOY Joysticks supplied by D.S.E. You will no longer have to buy a complete new set next time one of your Joysticks breaks down.

Enquires regarding any technical projects that appear in this newsletter should be directed to me, but please note I'm a shiftworker and the best time to call would be after lunch or tea.

Joe Leon
22 Drury st.,
Wallsend 2287
'phone (049) 512756.

AND NOW, YOUR OWN OCHESTRA !

After looking for something more to add-on to the VZ, I found the COMPUMUSE in ELECTRONICS AUSTRALIA, Aug.'83, interesting.

Pages 90 to 99 & 141 have the Assembly Instructions and Program LLISTings. The VZ will run this project quite happily from the Printer Interface, much like driving the Printer or Speech Synth. A kit of parts, including the P.C.B., is available from ALTRONICS or their retailers for $26.50 ('86 Cat. price). CAT # K-9834 page 26.

Every part is included except for:-

socketts for the chips
case to mount the unit in
and connector to plug the unit in with

There are a few mods. to made in the LLISTings before the unit will RUN.

LIST 1.

Add Line 5 to read :- 5 GOSUB 900

Lines 22,24,26 and 30, change the TAB(15) to TAB(5)

Line 70 is not supported on a Standard VZ but but this can be got around in two ways -

1) use of EXTENDED BASIC which allows the "ON" command to be used.

2) Rewrite line 70 and add lines 75 and 80 as:-

```
70 IF A=1 THEN 100
75 IF A=2 THEN 500
80 IF A=3 THEN 800
```

Then change lines 450, 710, 904 and 910 to read :- N=14. This is the PORT NUMBER for the printer interface on the VZ.

LIST 2.

Again - Line 60 is not supported by the VZ but you can get around this as you did for line 70 in listing 1. Change lines 30 and 1010 to read:- N=14, same as in listing 1.

The Hardware Mods...

Instead of mounting the preset pot (VR1) on the P.C.Board, I used a 10K ohm panel mounted pot on the case along with a switch to change the X'TAL frequency. Because of the LM386's low output, do not use too large a speaker. I used a fifteen way D.B. plug and sockett to connect my unit but with the price of centronics socketts these days, I would now use one of them. I recommend using the 5 volt regulator and external plug pack to power the unit. 9 volts at 200 to 300 mA. is sufficent. D.S.E. cat # M-9514 or M-9560.

All the signals and ground are at the centronic plug.

I assume that this Project is under Copyright, but, reproducing a SMALL section of the circuit should not hurt.

This section shows a switch to select frequencies. This should be taken into account in the listings.

The project worked at switch-on and has worked well ever since.

Dave Boyce.

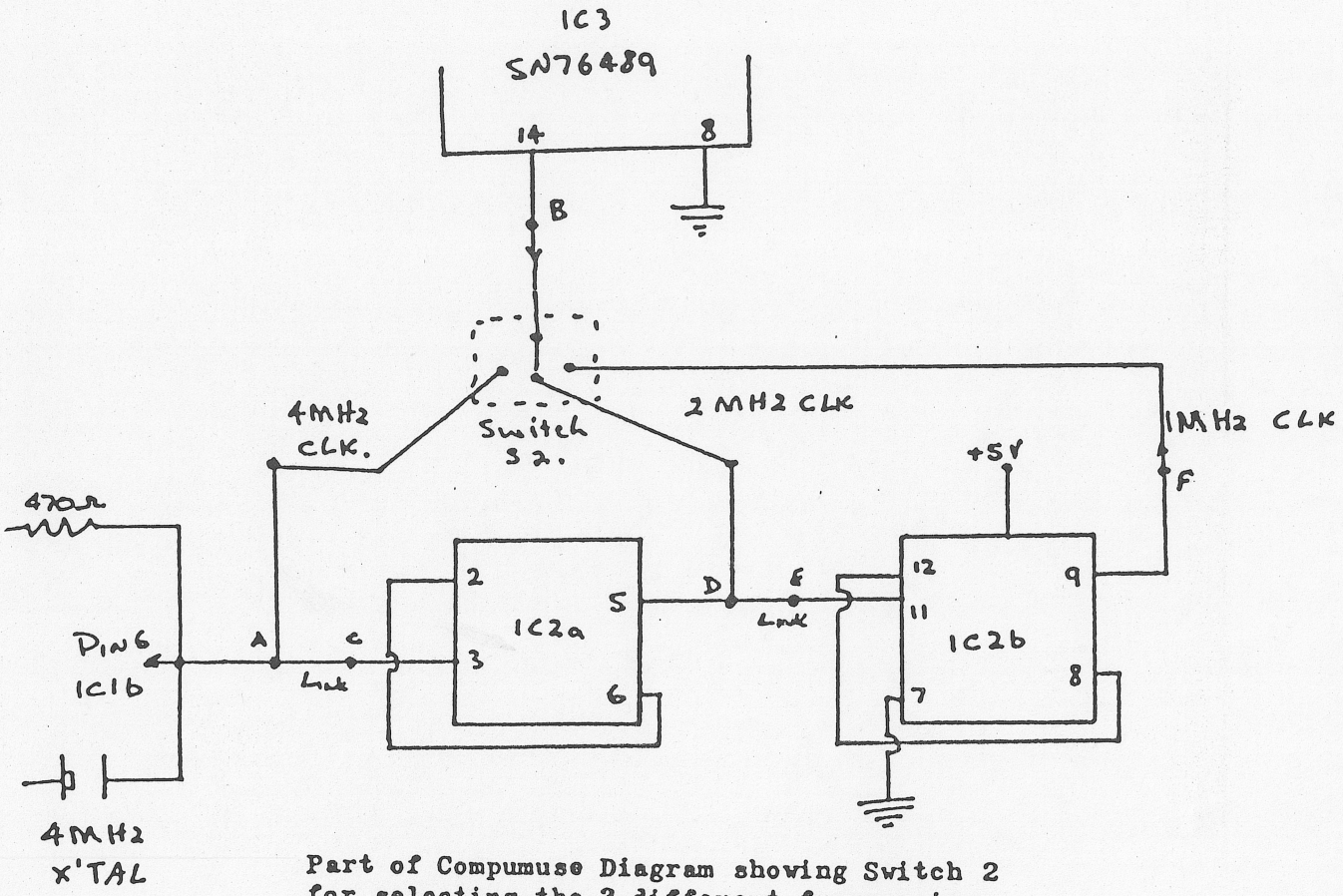

Part of Compumuse Diagram showing Switch 2 for selecting the 3 different frequencies. Don't forget the links 'a-c' and 'd-e' see instructions.

YOUR LOCAL ALTRONICS DEALER IS NOVACASTRIAN ELECTRONICS ... PHONE 621358

Whilst most of our members have had their VZ's for quite a while, we realize that there are a lot of late starters out there. Here a few tips to make computing a byte easier for you.

To find out how much memory you have left, try this subroutine:-

```
POKE 30862,212:POKE 30863,39: PRINT USR(X)
```

If you are working late at night and don't want Mum to know, turn the beep on the keys off, as follows:-

```
BEEP ON...POKE 30779,0
BEEP OFF..POKE 30779,1
```

A handy way to find faults in your programs is to implement the following commands:-

```
TRON (trace on)....POKE 31003,1
TROFF (trace off)..POKE 31003,0
```

To DELETE any subroutines or unwanted lines from a program try this:-

```
O  D200-500
POKE 31496,183   (Hit Return)
```

In this instance all lines from number 200 to number 500 (inclusive) are deleted.

Hope you find these hints help you out a byte. For all the experts out there who will say "But I already knew all that", remember there are some beginners around who must start somewhere and not everyone has purchased Extended Basic.

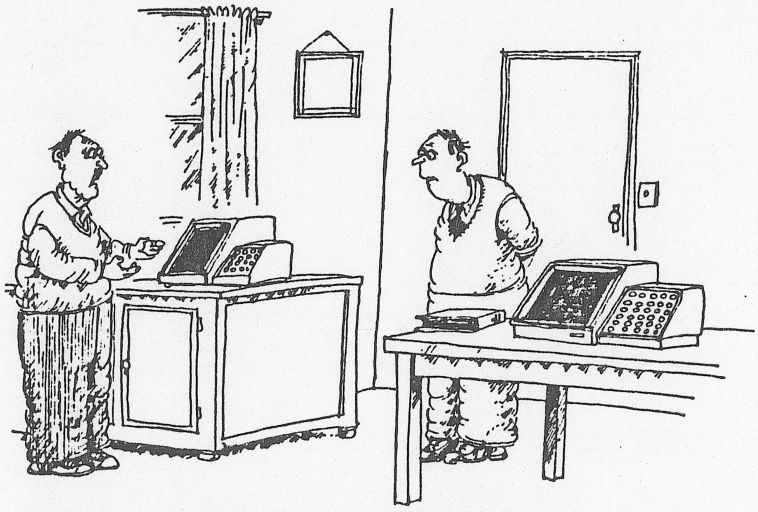

'And I bought this one to explain the manual of the first one.'

****

VideoCamera.J.V.C. With C Class Tele Lens, Built In Monitor. Internal Or External Syncro. $170.

Grundig Multiband Receiver Going Cheap.$25.

J.V.C Two Band Double Speaker ShortWave Radio. $20.

Yamaha 50cc Motorbike, Good Working Order. Runs On The Smell Of The Fuel Cap. Fat Tyres. $175.

RTTY Kits For Your VZ. Partslist, Program, Instructions And Circuitboard supplied. $15

For any of the above, phone RUDY on 437548.

****

I Want To Swap. One VZ200 For A DR10 Or DR20 Datacassette. Call Pete On 695697.

****

THIS IS YOUR SWAP & SHOP SECTION. CONTRIBUTE TO IT. THE ONLY COST IS EFFORT.